Swamperella Stage Plot: 2012

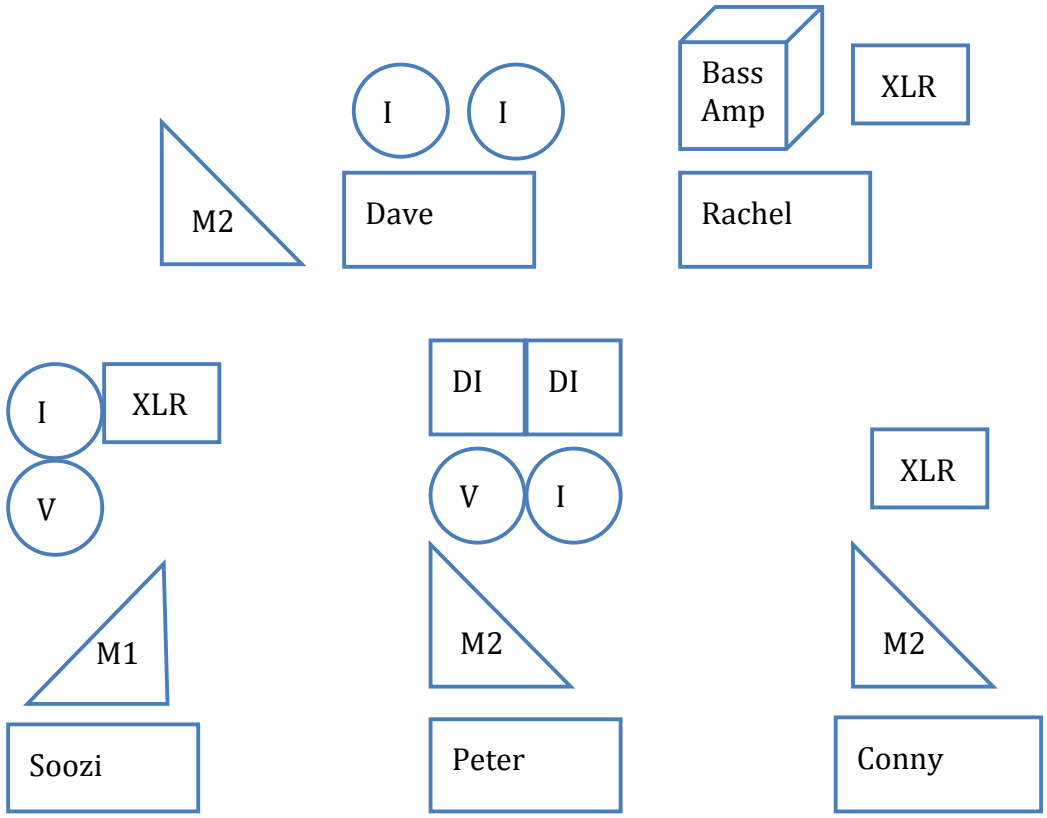

AUDIENCE

DI = Direct Box V = Vocal Mic I = Instrument Mic M1 = Monitor Mix 1 M2 = Monitor Mix 2 XLR = Mic line

Soozi: XLR cable for her fiddles
vocal mic
instrument mic for washboard and triangle

Peter: two DIs (one for fiddle one for accordion)
vocal mic
instrument mic (for chord side of accordion, stand not required)

David: one instrument mic for snare drum
one bass drum mic

Rachel: XLR cable for her bass

Conny: XLR cable for Acoustic Guitar

Everyone except David requires AC

Monitors: if there are a limited number of mixes, Soozi should have her own mix, and the rest of the band can be on another mix.

Note: Soozi needs the lower half part of a mic stand to mount her personal monitor